PRODUCT DATA SHEET

www.internationalgasdetectors.com

OLIVER IGD

Control Systems | Transmitters | **Sensors** | Accessories

TOC-30A
Series Gas Detectors

TOC-30A Series Gas Detectors provide accurate measurement of the background atmosphere to measure for a specific hazardous target gas. Clean lines and easy integration into existing or newly planned control systems make the TOC-30A the safety engineers device of choice. Using the latest microprocessor addressable technology and software TOC-30A is a reliable long term monitoring solution.

TOC-30A is supplied pre-calibrated ready to use.

Flexible options allow wall mounting, Dado mounting, Flush wall mount with adaptors for ducts, ceilings etc.

Flammable gas detector versions come in 2 styles, TOC-30A with MK7 pellistors and TOC-31A with MK6 pellistors. The latter has a seperable detector with M22 thread for easy mounting into ducting and containment.

TOC-30A Version Indicated

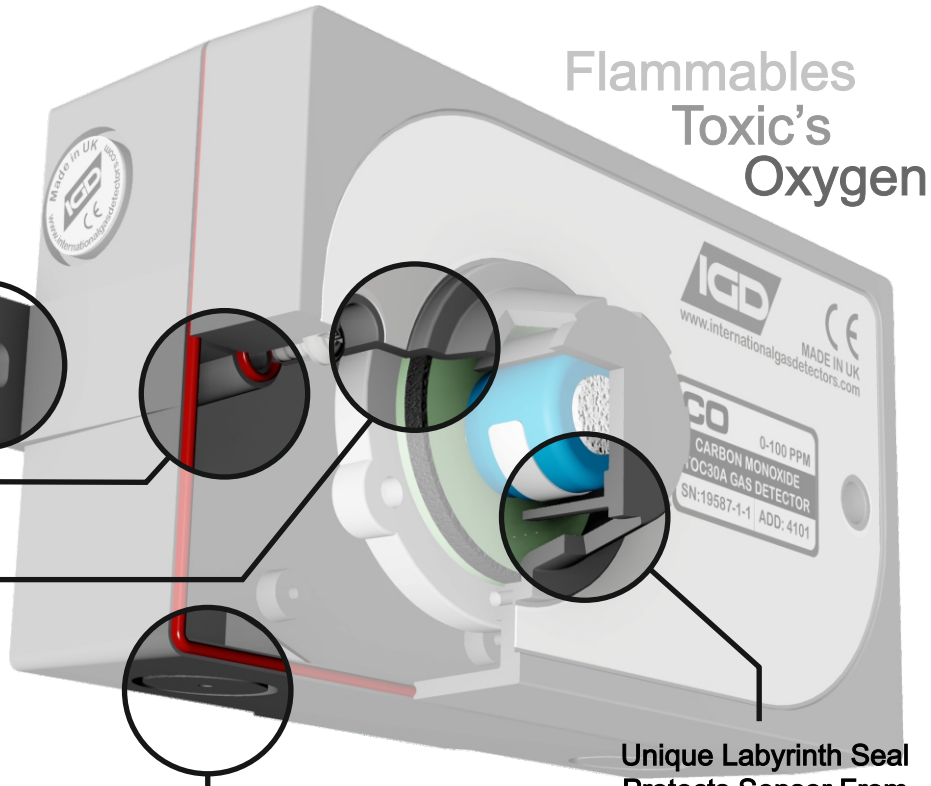

International Gas Detectors

CH_4 H_2S CO_2 N_2 SO_2 NO_2 CO

OLIVER IGD

Triton House
Crosby Street
Stockport
SK2 6SH
England

Tel: +44 (0)161 483 1415
Fax: +44 (0) 161 484 2345
Email: sales@internationalgasdetectors.com
Website: www.internationalgasdetectors.com

bsi. UKAS MANAGEMENT SYSTEMS 003

FS646773
REF: T30A-7.1

PRODUCT DATA SHEET

www.internationalgasdetectors.com

OLIVER IGD

Control Systems | Transmitters | **Sensors** | Accessories

Standard Specifications

Power	18-28V DC (Loop Powered)
Construction	ABS
Output	4 Wire Addressable
General Accuracy	+/-2% of Range
Temperature	-5 to 55 Deg C
Humidity	5-95% RH Non-Condensing
Sealing	IP54
Weight	425g

Sensor Accuracies & Response Times

Sensor Response times and accuracies are determined by the type of sensor used. The following table provides general guidance for tests carried out by IGD at standard conditions.

Type	T90 Response	Accuracy
Pellistors	<10s	+/-2% LEL
Infra Red	<15s	+/-2% of Range
Electrochemical as CO,H2S,SO2	<30s	+/-2% of Range
as O2	<15s	
as NO2,CL,NH3	<50s	

Standard Features

4-Wire Addressable Technology
Detector Technology to Suit the Application
Available as:
Infra red (Flammables and CO2)
Pellistor (Flammables)
Electrochemical (Toxic's and Oxygen)
Standard 2 Gang Pattress for TOC-30A Version
Dado Mount or Wall Mount
Pre-calibrated
In-Service Calibration Possible
Replaceable Sensor
Accessories for Duct Mounting, Sampling, bulkhead Mounting etc
Excellent Stability and Repeatability.
Compensated for Temperature and Drift

Typical Applications

Commercial Kitchens
Laboratories
Classrooms
Plant Rooms
HVAC Applications
Pipeline Monitoring
Hotels
Residences

TOC-31A Version

TOC-30A Version

International Gas Detectors

Triton House
Crosby Street
Stockport
SK2 6SH
England

Tel: +44 (0)161 483 1415
Fax: +44 (0) 161 484 2345
Email: sales@internationalgasdetectors.com
Website: www.internationalgasdetectors.com

FS646773
REF: T30A-7.1

EC Declaration of Conformity

Issuers name and address:

Oliver IGD Limited of
Triton House
Crosby St,
Stockport,
United Kingdom

Declares that the product listed as:

TOC-30A & TOC-31A

Addressable Hazardous Gas Detector

Are in conformity with the provisions of the following European Directive(s) when installed, operated, serviced and maintained in accordance with the installation and operating instructions contained in the product documentation.

2004/108/EC **EMC Directive**
2014/35/EC **Low Voltage Equipment Directive** *(note not applicable to 24V DC Powered Versions)*

And that the standards and/or technical specifications referenced below have been applied or considered.

EN 600079-29-1:2016	Explosive Atmospheres. Gas Detectors. Performance Requirements of Detectors for Flammable Gases. **Conforms to**
EN 61000-6-2: 2005	EMC Generic standards. Immunity for industrial environments
EN 61000-6-4: 2007/A1:2011	EMC Generic standards. Emission standard for industrial environments
EN 61000-3-2:2014	EMC Limits. Limits for harmonic current emissions (equipment input current ≤ 16 A per phase)
EN 61000-3-3: 2013	EMC Limits. Limitation of voltage changes, voltage fluctuations and flicker in public low-voltage supply systems, for equipment with rated current ≤ 16 A per phase
Technical File Reference	T30-TF9

Product Markings **TOC-30A/TOC-31A** *S/-serial number*

Oliver IGD Limited Operate and Independently assessed ATEX/IECEX QAN.

Quality Assurance Certificate Number
ExVeritas 16PQAN0014

Quality Assurance Notification Number:
2585

ExVeritas,
Units 16-18,
Abenbury Way,
Wrexham Industrial Estate,
Wrexham, UK, LL13 9UZ

Oliver IGD Limited operate an independently assessed ISO9001:2015 Quality Management System.

Quality Management Certificate Number
FS 646773

BSI Assurance UK LTD,
Chiswick High Road,
London
W4 4AL
UK

Testing Agency:

TUV - SUD
Octagon House
Concorde Way
PO 15 5RL
Fareham

Mehr Sicherheit.
Mehr Wert.

TUV Certificates and reports can be checked on-line at https://www.tuev-sued.de/industry_and_consumer_products/certificates

Issued on: March 2019 At Oliver IGD Limited, Stockport, SK2 6SH , United Kingdom

Signature: Declaration of Conformity in accordance with EN ISO/IEC 17050-1:2010

Name Andrew J Collier M.I.O.D

Position: Managing Director Date: March 2019 Declaration Ref: TOC-30A-DEC-4

PRODUCT DATA SHEET

www.internationalgasdetectors.com

OLIVER IGD

Control Systems | Transmitters | **Sensors** | Accessories

Order Codes

Gas	Standard Range	Order Code	Typical Cell Life
Flammable Gases external sensor	0-100% LEL	TOC-31A-PHC	> 5 Years
Flammable Gases internal sensor	0-100% LEL	TOC-30A-PHC	> 5 Years
Carbon Monoxide Lo	0-100ppm	TOC-30A-CO	> 5 Years
Carbon Monoxide Hi	0-1000ppm	TOC-30A-HCO	>5 Years
Oxygen	0-30% Vol	TOC-30A-O2	> 5 Years
Nitric Oxide	0-200ppm	TOC-30A-NO	>2 Years
Nitrogen Dioxide	0-20ppm	TOC-30A-NO2	>2 Years
Ammonia	0-100ppm	TOC-30A-NH3	>2 Years
Chlorine	0-20ppm	TOC-30A-CL2	>2 Years
Sulphur Dioxide	0-5ppm	TOC-30A-SO2	>2 Years
Boron Trichloride	0-10ppm	TOC-30A-BCL3	>2 Years
Carbon Dioxide	0-1000ppm	TOC-30A-CO2	>5 Years
	5000pppm	*State range required when ordering*	
	0-5%		
Hydrogen	0-1000ppm	TOC-30A-H2	>2 Years
Hydrogen Sulphide	0-50ppm	TOC-30A-H2S	>3 Years
Hydrogen Chloride	0-10ppm	TOC-30A-HCL	>2 Years
Nitrous Oxide	0-1000ppm	TOC-30A-NO	>2 Years
Silane	0-10ppm	TOC-30A-SIH4	> 1 Years

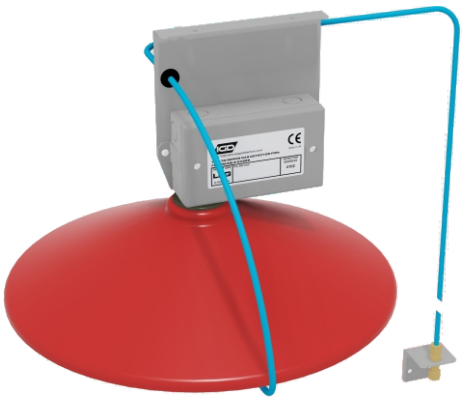

Detector Fitted with gas collector cone and remote gassing facility

Note: Sensor life time is dependant on environment and correct maintenance.

Accessory Order Codes

Gas Collector Cone	5138801
Ceiling Mount Kit (TOC-31A-PHC)	50006601
Remote Gassing Kit	5110101
Cal Gas Adaptor (TOC30A)	5925701
Cal Gas Adaptor (TOC31A)	4011109
Splashguard (TOC30A)	TOC-30-GD
Splashguard (TOC31A)	5138701

TOC-31A-PHC Version uses a MK6 Flammable Gas Detector with M22 x 1.5 Threaded front. This allows easy fitting to threaded bosses, ducts, splash guards etc

International Gas Detectors

Triton House
Crosby Street
Stockport
SK2 6SH
England

Tel: +44 (0)161 483 1415
Fax: +44 (0) 161 484 2345
Email: sales@internationalgasdetectors.com
Website: www.internationalgasdetectors.com

FS646773
REF: T30A-7.1

PRODUCT DATA SHEET

www.internationalgasdetectors.com

OLIVER IGD

Control Systems | Transmitters | **Sensors** | Accessories

Physical Size TOC-31A Version

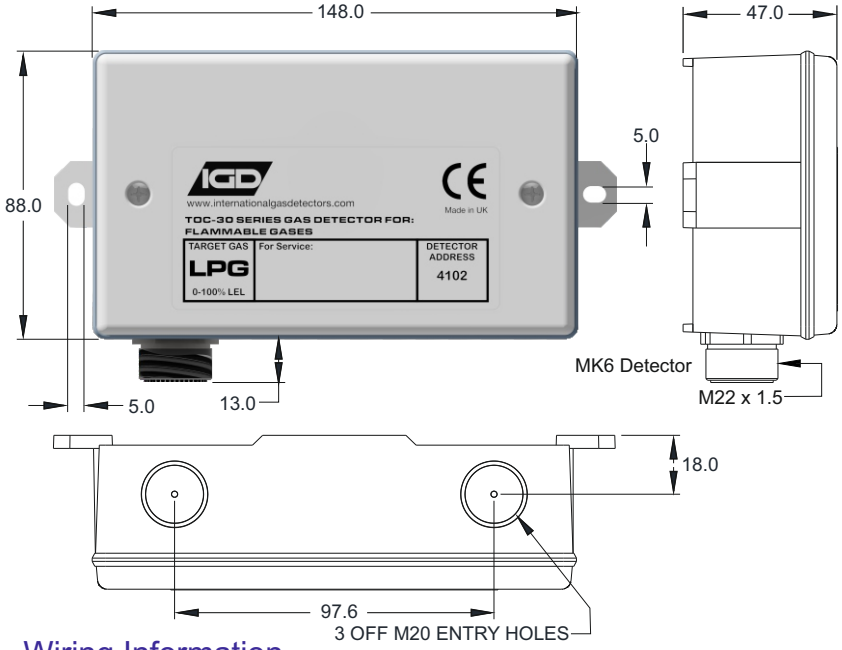

Physical Size TOC-31A Version

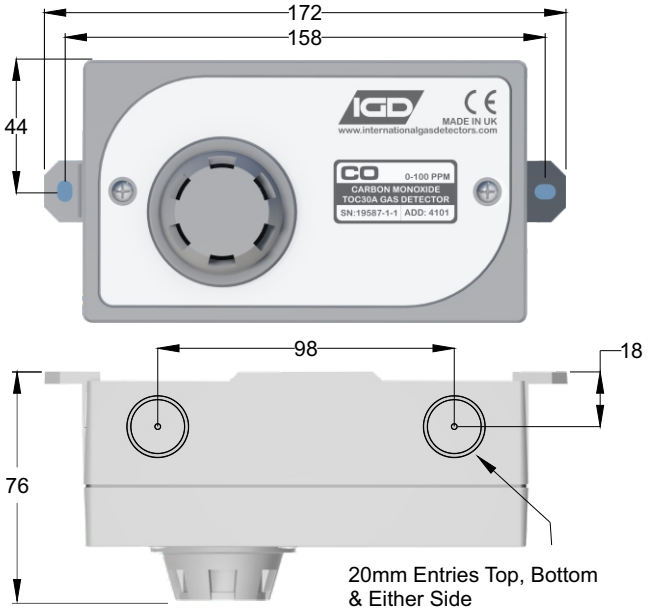

Wiring Information

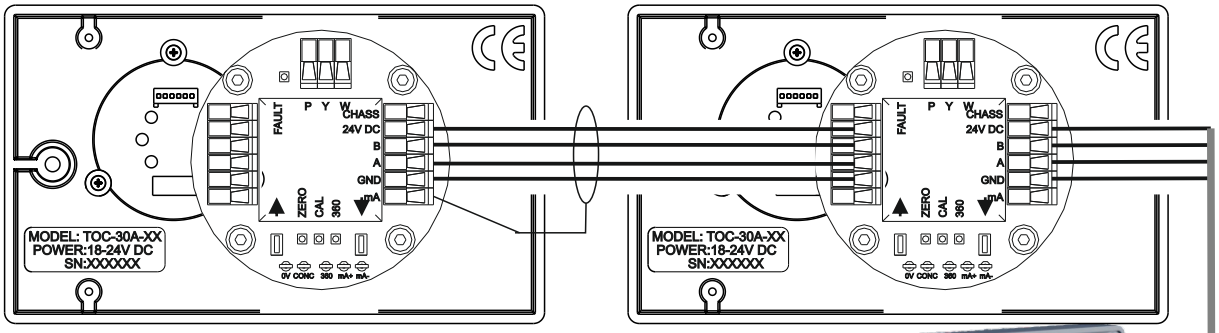

Detector Fitted With Gas Collector Cone

Set Alarms
Interface to
Beacons/sounders
Other Systems

Controller Shown
For Information Only

Use screened cable typically FP200 or CY style cable, 4 core min 1.5mmSQ. Ground cable screens to the earth studs provided.

Note typically up to 32 detectors can be accommodated on a single cable run.

Addressable detectors will require a suitable controller for further information see data sheets for TOCSIN-640 (indicated right), TOCSIN 625, Tocsin i700 or Tocsin 920 Series Controllers.

International Gas Detectors

OLIVER IGD

Triton House
Crosby Street
Stockport
SK2 6SH
England

Tel: +44 (0)161 483 1415
Fax: +44 (0) 161 484 2345
Email: sales@internationalgasdetectors.com
Website: www.internationalgasdetectors.com

FS646773
REF: T30A-7.1